INTERACT 2001 Submission Style Guide

Author Name, Author Name 2 & Author Name 3

Organisation, Address, Town, Country

emailname@small.medium.large

Abstract: You are invited to write a submission for presentation at the INTERACT 2001 conference in Tokyo, 9th to 13th July, 2001. Accepted submissions will be published in the INTERACT 2001 conference proceedings. This document introduces the INTERACT 2001 submission style guide using the template created in Microsoft Word format. Authors are advised to read this document before they start to prepare their submission in camera ready copy format.

Keywords: style, guide, HCI, Tokyo

1 Guidelines for Submission

These guidelines should be read in conjunction with the Call for Participation (available electronically on the INTERACT 2001 Conference Official Web site at http://www.interact2001.com) or from the INTERACT 2001 Conference Office.

2 Scope and Purpose

Papers should present new work related to one or more of the conference topics listed in the Call. Full papers must not exceed 8 printed pages. Other tracks should consult the track chair or see the web pages (http://www.interact2001.com) for details of submission length. All submissions must represent original contributions, and be substantially different from any paper the authors have published previously, or submitted for publication elsewhere.

3 Format, Style and Content

3.1 Page size

All material on each page should fit within a print area of 225 by 160 mm (not including headers and footers). Try to centre your paper on the page.

The first page of the paper has a different format from all the following pages.

The first page is positioned 35mm from the top of the page, at least 15 mm from the left margin, centred on the page.

The second and all subsequent pages are positioned 20mm from the top of the page, and at least 15 mm from the left margin, centred on the page.

On the last page, both columns of text should be centred on the page and balanced evenly across the page (leaving a similar amount of blank area in both columns at the end of the page). You may need to make adjustments to ensure that this happens.

The target page size for the printed proceedings is 260 by 190 mm. A larger page size, up to A4, may be used for the submission, but the print dimensions remain the same. There will be no reduction or enlargement in the final printing.

Normal or body text should be left and right justified in double column format (except for the title, abstract and keywords - see below) with a space of 10 mm between two 75 mm wide columns.

3.2 Title and Authors

The title should be in Times Roman 18-point, centred, as a single column across the page. The first line of the title should be at least 35 mm from the top of the page. Leave two blank lines after the title.

The author name(s) should follow the title in 14-point Times Roman, centred, bold, single column across the page, followed by one blank line.

The author affiliations should follow in 14-point Times Roman, centred, single column across the page, followed (optionally) by email addresses, and then by one blank line.

3.3 Abstract and Keywords

Every submission should begin with an abstract of not more than 150 words, followed by up to 7 keywords.

The abstract should be a concise statement of the problem, approach, findings, and conclusions of the work described. The abstract starts with the title Abstract: (in bold) followed by text, not more than 150 words long. The abstract should be in Times Roman 10-point, left and right justified, as a single column across the width of the page, followed by one blank line.

The keywords section starts with the title Keywords: (in bold) followed by a list of keywords separated by commas, and should be in Times Roman 10-point, left and right justified, as a single column, across the width of the paper, followed by two blank lines.

Please use a 10-point Times Roman font, or other Roman font with serifs, as close as possible in appearance to Times Roman. Sans-serif or non-proportional fonts should be used only for special purposes, such as distinguishing source code text. (The Press 10-point font available to users of Script is a good substitute for Times Roman.) If Times Roman is not available, try the font named Computer Modern Roman. On a Macintosh, use the font named Times.

The text should be left and right justified (not ragged), in double column format with a space of 10 mm between the two 75 mm wide columns.

The first line of each paragraph in the text starts is indented about 0.5cm, unless it is the first paragraph after a heading in which case it starts at the left-hand margin.

Note: If you do not have access to Times Roman fonts, contact the INTERACT 2001 Secretariat for help.

Use the Harvard system if possible. References should be cited in the text by name and date, for example (Apperley, 1989) or (Benbow, 1980; Keller, 1999) or (Card et al, 1983). A list of cited references is included at the end of the submission, as a separate un-numbered section, in alphabetical order of author name, and then chronologically within author name.

References should be published materials accessible to the public. Internal technical reports may be cited only if they are easily accessible (i.e. you can give the address to obtain the report within your citation) and may be obtained by any reader. Proprietary information may not be cited. Private communications should be acknowledged, not referenced (for example, "[Robertson, personal communication]").

Papers should not normally have more than 15 references.

The reference section starts immediately after the last paragraph in the text body. It starts with the title References (in bold) preceded by two blank lines. The references follow in the same double column format as in the body text, except that the font for references is in 9-point Times Roman font. The second and subsequent lines in each reference are indented about 0.8cm. The following words are to be placed in italics: the name of a referenced book, a chapter, or section of a book, the name of the Journal in which a referenced article appears or the name of the Proceedings of a conference in which a paper was presented.

Each reference is followed by one blank line.

Figures will be printed in the Proceedings in black & white only. Colour figures cannot be accommodated in the printed proceedings.

Figures should be inserted at the appropriate point in your text and normally should be no more than one column in width. If necessary, figures may extend over the two columns, up to 160mm in width. Each figure should have a figure caption in Times Roman (9-point) beneath the figure. The caption should be centred and labelled Figure n: in 9-point bold mixed case. This should be followed by the title of the figure in 9-point mixed case.

An example of a figure is shown in Figure 1.

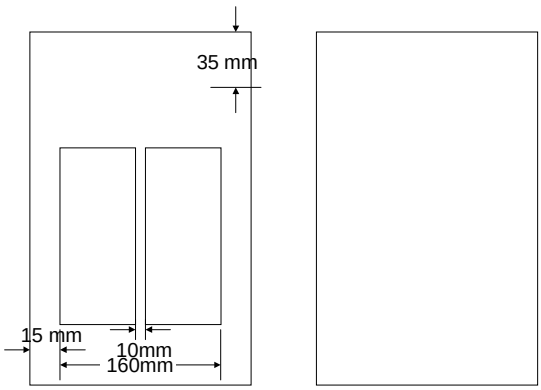

Do not include headers, footers or page numbers in your submission. These will be added when the publications are assembled.

First order headings should be in 14-point bold mixed case, where upper case is used for the first letter of the word only, left justified, preceded by two blank lines. First order headings should be numbered consecutively with no period (full stop)